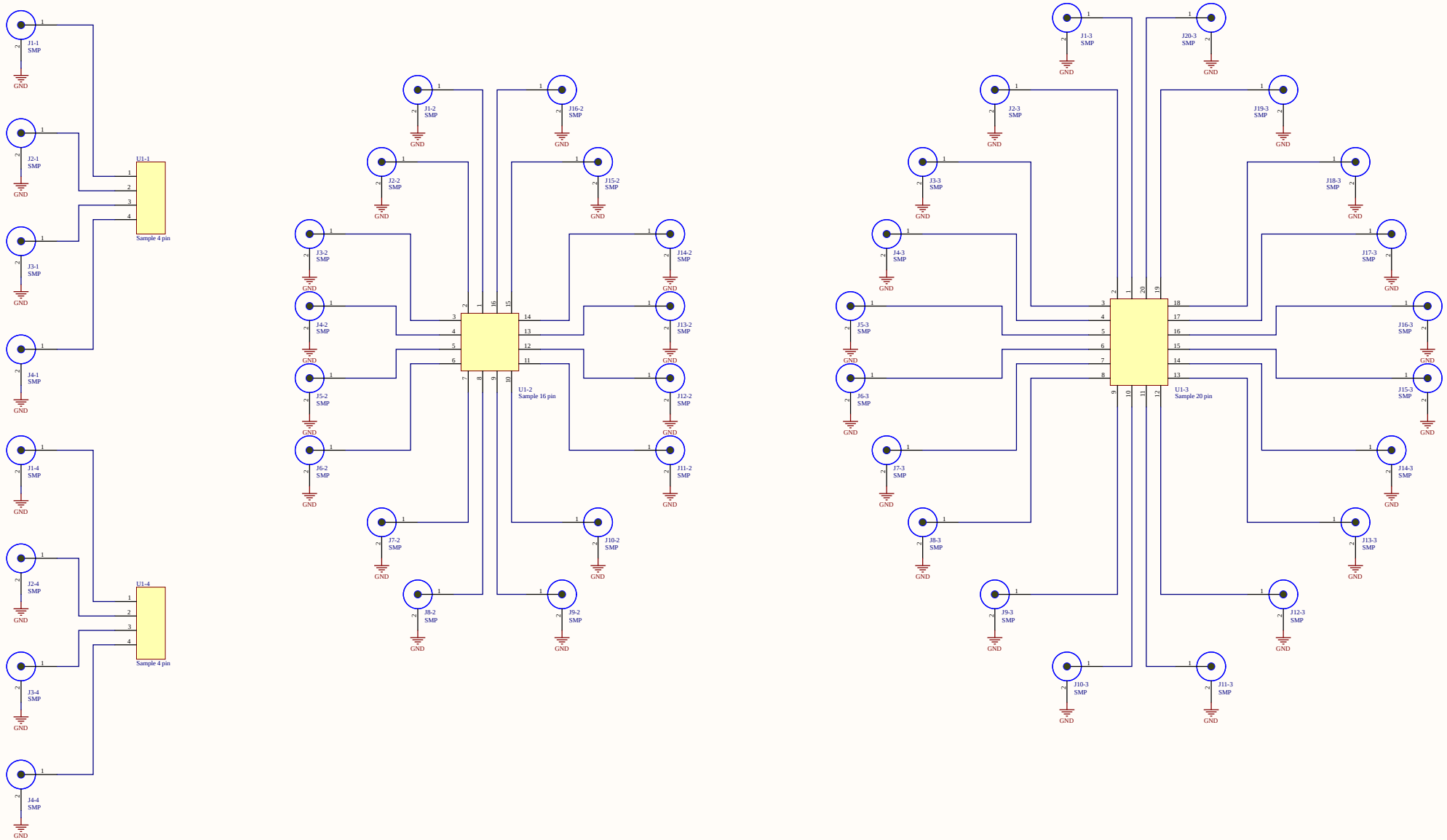

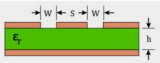

calculation table !

INPUT DATA

Relative Dielectric Constant (ε_r):	3.48	
Track Width (S):	0.6	mm
Gap Width (W):	0.6	mm
Dielectric Thickness (h):	0.254	mm

RESULTS

Effective Dielectric Constant (ε_{eff}):	2.779	
Characteristic Impedance (Zo):	49.98	Ohms

Calculate

Title		
Size A2	Number	Revision
Date: 3-13-2023	Sheet of	
File: M:\ud\..\23-005 Sample Board Niccolo Jones.Dwg	Drawn By:	